AUTOMATED TEST JIG FOR UNIFORMITY EVALUATION OF LUMINARIES

Deepa Ramane[1], Jayashri Bangali[2], Arvind Shaligram[3]
[1] *Department of Electronic science ,Dr. D. Y. Patil Arts, Commerce and Science College, Pimpri, Pune, Maharashtra, India*
[2]*Department of Electronics, Kaveri College of Science and Commerce, Erandwane, Pune, Maharashtra, India*
[3] *Department of Electronics Science, University of Pune, Pune, Maharashtra, India*

ABSTRACT
Uniformity of illumination is of prime importance in the designing of lighting system. Often it is achieved by measuring illuminance values on the target plane at predefined locations using luxmeter. To speed up the experimentation and to automate the measuring procedure, a portable test-jig is developed at work place. It acquires illuminance data from sixteen predefined locations on target surface simultaneously. The data is used for computing uniformity of illumination. The test-jig consists of photo sensors, Data Acquisition System (DAS) and control system. The photo sensors are fixed on a flex sheet which can be rolled. The sheet is spread over the surface whose uniformity is to be measured. The portable, automated test-jig gives the uniformity of illumination quickly. The test-jig is used to evaluate the performance of three luminaries viz. incandescent bulb, CFL and LED. Results confirm that LED bulbs are energy efficient than others giving more illuminance without hampering illumination uniformity. LED luminaire of 6 W illuminates 1m X 1m target surface having uniformity in the range of 0.4 – 0.73 for target-source distance of 50cm – 170cm. Dependence of uniformity on source wattage and view angle is also reported.

KEYWORDS: *lighting system, uniformity of illumination, photo sensor, DAS (Data Acquisition System)*

I. INTRODUCTION

Light Emitting Diodes (LEDs) have been the subject of growing interest of lighting designers over recent years. LEDs are replacing conventional light sources such as incandescent bulb, compact fluorescent tube etc. in almost all of the illumination applications [1, 2]. Wide range of illumination applications demand different specifications such as recommended lux level, uniformity of illumination, minimum glare, low cost, less energy consumption etc. The recommended values of these specifications are provided in IESNA handbook and are achieved by proper luminaire design. Uniformity is one of the major specifications in many applications. Before installation of luminaire, lighting designer has to verify whether the proposed illumination system design, fulfils the specified value of uniformity along with the recommended value of illuminance level. Computation of uniformity needs illuminance data on target surface from number of locations. The data provides maximum, minimum and average illuminance values. Acquisition of illuminance data from number of locations simultaneously and accurately is a challenging task.

The proposed automated, portable test-jig measures the illuminance in lux at different points on the target surface and computes the uniformity of illumination which can be used as a metric to evaluate the performance of the luminaire.

The illumination uniformity evaluation methods reported in literature are reviewed in the beginning. The test-jig developed for automatic acquisition of illuminance data is presented in subsequent section followed by description of experimental setup. Using the test-jig performance of three different

luminaries viz. incandescent bulb, CFL and LED is evaluated. The results of this testing and discussion on the obtained results are given at the end.

II. LITERATURE REVIEW

Lot of research is being done to design luminaire with improved uniformity. Majority efforts claim to provide optimal solution so as to have uniform illumination over a planer surface by optimizing number of parameters like number of source elements, their geometrical placement, optical characteristics of sources, source to target plane distance etc [3-8]. Papers have reported use of secondary optics such as diffuser, lenses, and reflectors for further improvement in uniformity [9]. To verify the feasibility of LED luminaire design, optical simulation programs either based on ray tracing or on analytical equations are used [10-13].

Experimentally, performance of luminaire can be evaluated by three different methods: illuminance, luminance, and small target visibility [14]. Among these methods, the illuminance measurement method is mostly used to evaluate the luminaire performance. Zeljko *et. al.* have measured illuminance with automated inspection of ceramic tiles using "dot-method"[15]. Many times the uniformity is computed by capturing image of illuminated surface by CCD camera. The image is used to plot iso-contours using MATLAB software which are used as metric of uniformity [7]. Simple method to measure illuminance levels is using handheld luxmeter. The illuminance data is acquired from different points on the target surface by manually positioning the luxmeter at desired locations. The data is used to determine maximum, minimum and average illuminance values which predict uniformity. This method of manual collection of data is sometimes troublesome and labour-intensive. In applications like evaluation of roadway lighting systems, safety of operators is key issue. Zhou *et . al.* have reported a measurement system consisting of light meter, a distance measurement system, a computer and software for roadway lighting system [14]. Considering need for development of portable, handy and speedy automated test-jig for uniformity evaluation, an attempt has been made.

III. TEST – JIG DEVELOPMENT

The block diagram of the test-jig developed for this task is shown in figure 1. It consists of a luminaire under test, the control system, 16 – channel Data Acquisition System (DAS) and a personal computer to store, analyze and display the captured data. The idea is to sense the illuminance on the target surface at number of predetermined points for the computation of uniformity as per IESNA guideline. Further illumination analysis is carried out in MATLAB version 7.8.

The development of test-jig involves the following tasks:

- hardware development for automatic collection of illuminance data;
- software development to collect, store and analyze illuminance data.

3.1 Hardware Development

Development of hardware involves designing of control system and 16 – channel DAS. The control system comprises of photo sensors, signal conditioners, an analog multiplexer, a counter and a pulse generator. The photo sensors are fixed on the flex sheet of 1m X 1m dimension at predetermined locations. The sheet is spread over the target plane of which uniformity is to be evaluated. This photo sensor sheet can be folded or rolled so that it becomes handy for carriage and for storage. Here photo sensors used are LDR whose output resistances are calibrated against intensity values using luxmeter. The locations are dependent on number of luminaires for which guideline is given in IESNA handbook [16]. The photo sensors capture illuminance values. The outputs of these photo sensors are connected to the input channels of the analog multiplexer. The analog multiplexer sequentially passes channel illuminance values to output of DAS. To automate the selection of the channels, 4-bit counter is used which generates binary sequence from 0000 to 1111. The rate of channel selection is controlled by the frequency of the pulse generator. The output of the multiplexer is connected to Data Acquisition System of Rishabh company.

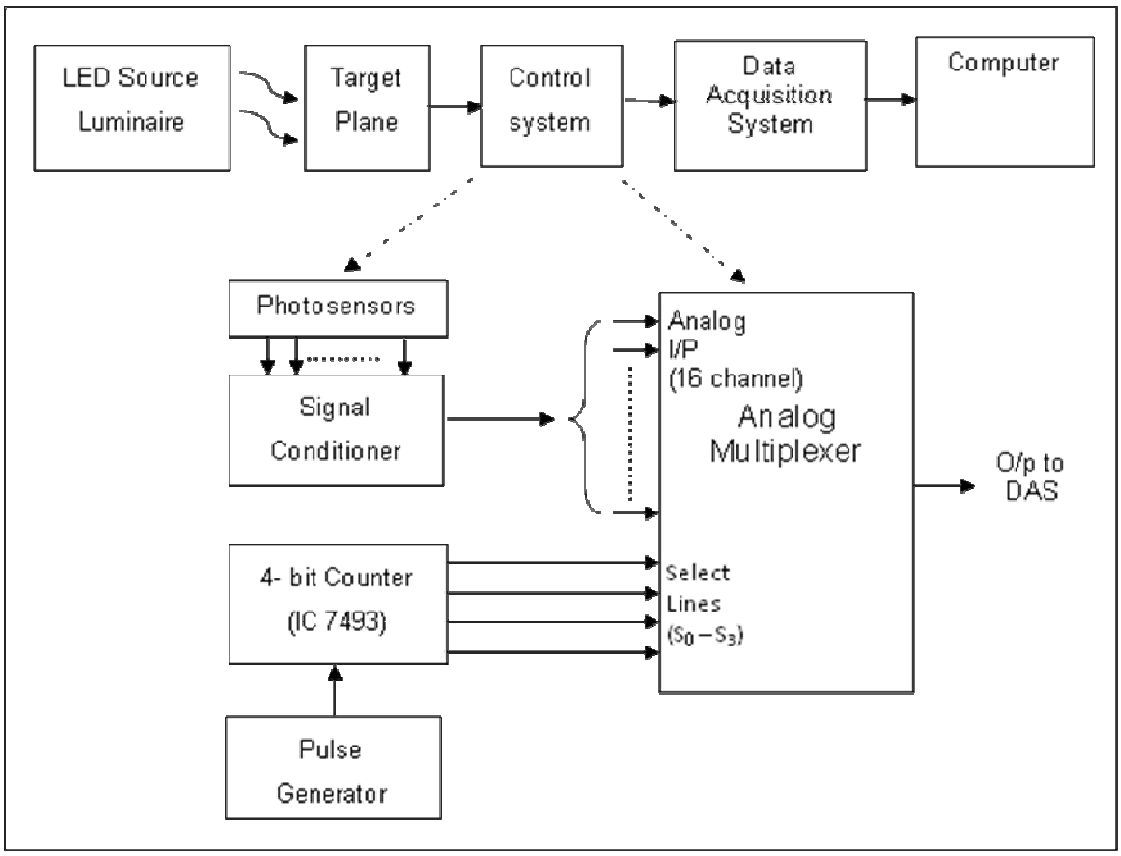

Figure 1. Block Diagram of Test-jig for Uniformity Evaluation of Illumination System

3.2 Software Development

Through USB port the resistance data of photo sensors are transferred to Rishabh system software one after the other. The equivalent illuminance data values are retrieved in excel sheet as a function of position of target point. The sampling frequency of data acquisition can be adjusted in the software. For the results produced in the next section sampling frequency is kept as 1 second. From each target point five data samples have been taken. Average of these data samples is taken as illuminance of that target point. Further the uniformity is computed using formula:

$$\text{Uniformity of illumination} = \frac{\text{Average illuminance}}{\text{Maximum illuminance}} \qquad \ldots\ldots\ 1$$

In this case average illuminance on target plane is the average of illuminance values at 'n' target points.

$$\text{Average illuminance} = \frac{\sum_{1}^{n} \text{Illuminance values at target point}}{n} \qquad \ldots\ldots\ 2$$

Perfect uniform illumination is said to be achieved when maximum and average illuminance levels match. Under this condition uniformity ratio become one. Designer tries to achieve uniformity value as maximum as possible. For general illumination applications uniformity ratio upto 0.6 is tolerable while task illuminations need uniformity ratio greater than 0.9.
Illuminance data at 'n' target points is imported in MATLAB 7.8. The 3-D plots of illuminance distribution helps in further analysis.

IV. EXPERIMENTAL SETUP

Experimental setup used for uniformity measurement is given in figure 2. It consists of source assembly, pulley arrangement and a luxmeter. The luxmeter is used to note down illuminance readings to validate the results of the developed test-jig. The pulley arrangement is used for source mounting and source-target height adjustment. The source assembly is mounted on a wooden board along with its driving circuitry. The source height is adjusted by moving the wooden board assembly up and down by pulling the rope. The target surface is at a distance of 'h' meter from the source. The flex sheet is spread over the illuminated target surface. Thirteen photo sensors are placed on the flex sheet as shown in figure 3. The placement of photo sensors is as per the guidelines given in reference 16 for average illuminance measurement for regular area with symmetrically located single luminaire. Illuminance values are measured using test – jig and also by luxmeter.

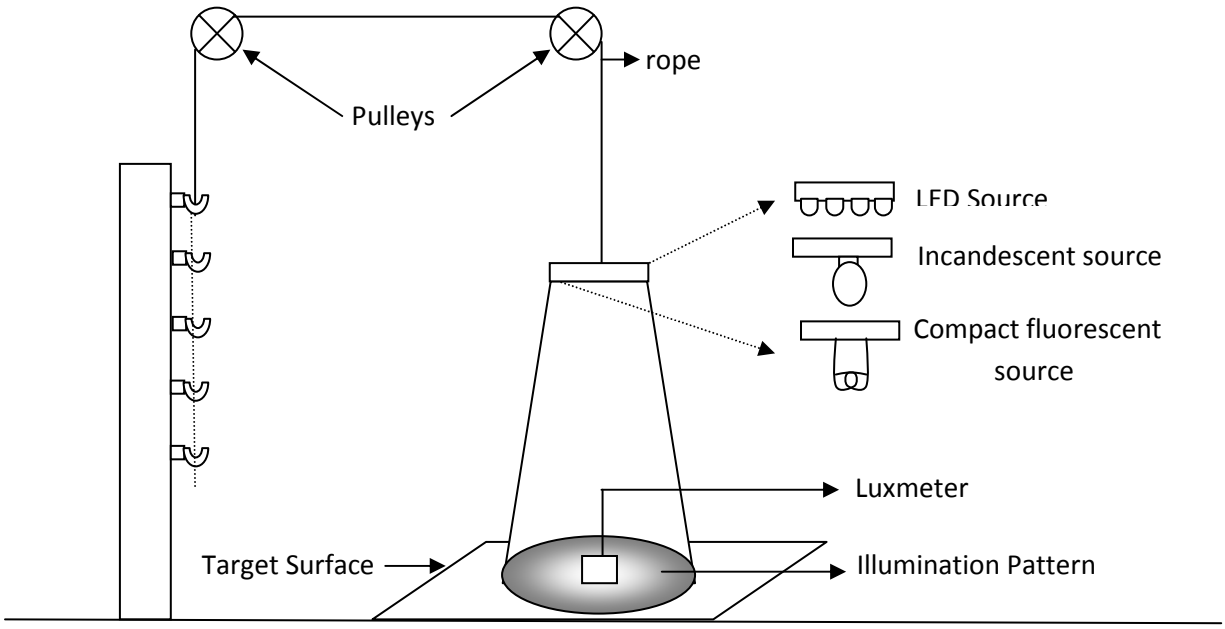

Figure 2 Experimental setup for uniformity measurement

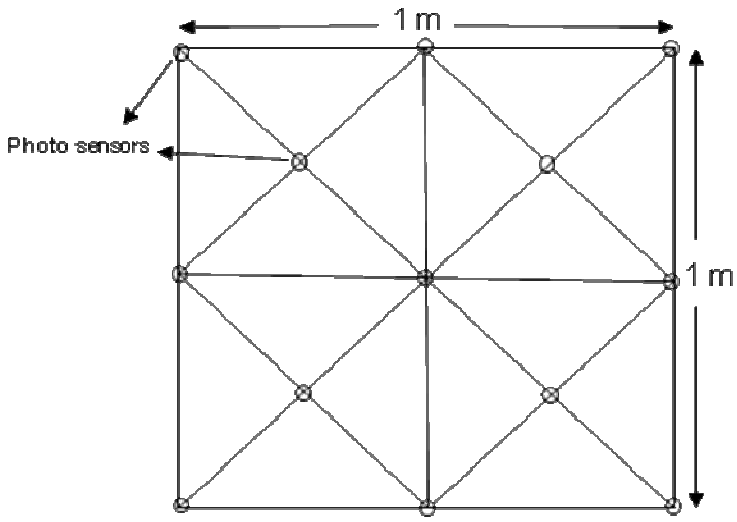

Figure 3 Placement of photo sensors on the flex sheet

V. RESULTS AND DISCUSSIONS

The test-jig is used to evaluate the uniformity of illumination when the target surface of 1m X 1m dimension is illuminated by incandescent, CFL and multiple LED source luminaire at different heights. Considering LED as future of illumination, experiments are performed for multiple LED source luminaire with variable source geometry and with optical characteristics.

Uniformity values are computed using illuminance results obtained using test-jig as well as by actual measurement with luxmeter. The results of experimentation are tabulated in table 1 and 2. Table 1 compares the performance of light sources at different heights. Figure 4 shows 3-dimensional graphs of illuminance distribution over flex sheet, plotted in MATLAB.

Table 1 Uniformity results for source comparison

(T = test-jig results; E = luxmeter results)

Light source	Uniformity at height 50 cm		Uniformity at height 80 cm		Uniformity at height 110 cm		Uniformity at height 140 cm		Uniformity at height 170 cm	
	T	E	T	E	T	E	T	E	T	E
LED, 6 W,	0.41	0.44	0.52	0.57	0.61	0.64	0.65	0.67	0.70	0.73
CFL, 11 W	0.42	0.46	0.51	0.53	0.62	0.65	0.63	0.67	0.72	0.76
Incandescent, 60 W	0.30	0.32	0.41	0.45	0.51	0.53	0.61	0.64	0.80	0.84

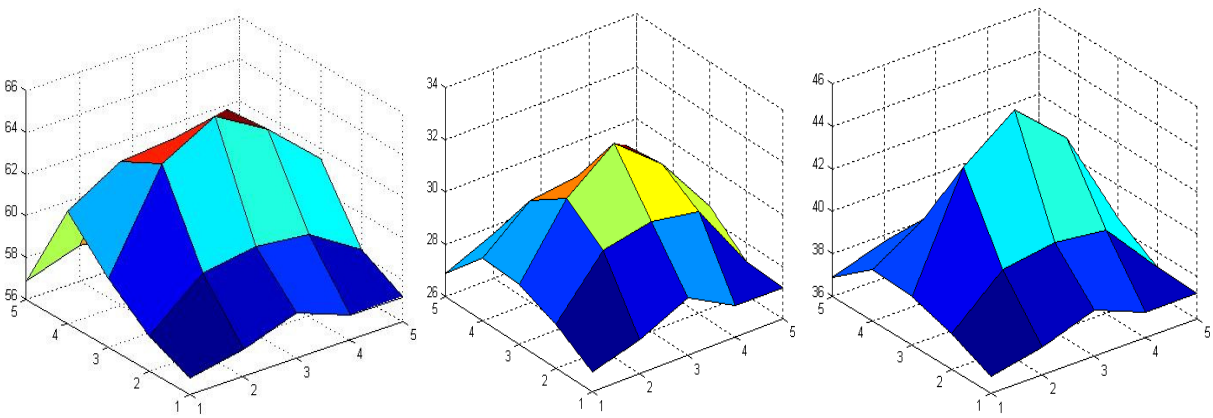

(a) LED luminaire : 6 W (b) CFL luminaire : 11 W (c) Incandescent luminaire : 60 W

Figure 4 : 3-dimensional view of Illuminance distribution over flex sheet

3-D graphs show greater peak illuminance at center of target plane for all luminaries. The peak values are 61.8, 29.5 and 41.6 lux for LED, CFL and Incandescent luminaire respectively. The illuminance is greater for LED luminaire in spite of lower wattage. Table 1 results show that uniformity of LED bulb is at par with other two sources. So one can say that LED bulbs are energy efficient giving more illuminance without hampering uniformity.

LED luminaire performance is evaluated for increased in wattage and increasing view angles at different heights. Table 2 summarizes the uniformity results for the same.

Table 2 Uniformity results for LED luminaire

(T = test-jig results; E = luxmeter results)

LED luminaire wattage with spatial distribution of each LED	Uniformity at height 50 cm		Uniformity at height 80 cm		Uniformity at height 110cm		Uniformity at height 140 cm		Uniformity at height 170 cm	
	T	E	T	E	T	E	T	E	T	E
6W, 135°	0.41	0.44	0.52	0.57	0.61	0.64	0.65	0.67	0.70	0.73
6 W, 60°	0.34	0.38	0.41	0.44	0.54	0.58	0.60	0.62	0.63	0.65
12 W, 60°	0.41	0.44	0.63	0.67	0.65	0.66	0.70	0.72	0.81	0.83

Readings show that as height increases uniformity of illumination improves for all three luminaires. For same height wider angle LED luminaire gives better uniformity. If one increases source flux then also uniformity greatly improves.

VI. CONCLUSION

The paper reports an automatic test-jig using 16-channel DAS useful for the illumination uniformity measurement. The photo sensors are mounted on flex sheet of size 1m X 1m and the paper is spread over the area on the illuminated surface of which analysis is to be done. Using developed test-jig illuminance values on target plane are measured at predefined locations. It simultaneously acquires illuminance data from sixteen predefined locations. The portable, automated test-jig speeds up the illuminance measurement procedure and hence useful for computing uniformity of illumination on the target plane. The jig is tested for three types of conventional sources and for LED luminaire with variable wattage and view angle. The developed test-jig results are compatible with the results obtained using luxmeter. The developed system is useful for evaluation of uniformity of illumination for all types of luminaire and thus helps the designer to optimize luminaire design.

REFERENCES

[1]. Evans D.L., "High Luminance LEDs Replace Incandescent Lamps in New Applications," SPIE, vol. 3002, 142-153.

[2]. Peon R, Doluweera G, Platonova, Halliday D., (2005) "Solid state lighting for the developing world- the only solution, " SPIE, 5th international conference on solid state lighting, vol. 5941,59410N-1 to 59410N-15.

[3]. Moreno I., (2004) "Configuration of LED arrays for uniform illumination," Proc. SPIE, Vol. 5622, pp 713-718.

[4]. Kopparapu S.K., (2006) "Lighting design for machine vision application," Image Vision Computation, Vol. 24, pp 720-726.

[5]. Moreno I., (2006) "Design of LED spherical lamps for uniform far-field illumination," Proc. SPIE, Vol. 6046, pp 60462E 1- 60462E7.

[6]. Wittels, Norman, Gennert, Michael A., (1994) "Optimal lighting design to maximize illumination uniformity," SPIE, Vol. 2348, pp 46-56.

[7]. Hongming Yang, Jan W. M. Bergmans, Tim C. W. Schenk, Jean-Paul M. G. Linnartz, and Ronald Rietman, (2009) " Uniform Illumination Rendering Using an Array of LEDs: A Signal Processing Perspective," IEEE Transactions on Signal Processing, Vol. 57, No. 3, pp 1044 – 1057.

[8]. Gennert, Michael A., Wittels, Norman, Leatherman, Gary L, (1993) "Uniform frontal illumination of planer surfaces: where to place the lamps," Optical Engg. Vol. 32 (06), pp 1261-1271.

[9]. Fei Chen, Sheng Liu, Kai Wang, Zongyuan Liu, Xiaobing Luo, (2009) "Free-form lenses for high illumination quality light-emitting diode MR16 lamps," Optical Engg, Vol. 48 (12), pp 123002-7.

[10]. Zong Qin, Kai Wang, Fei Chen, Xiaobing Luo, Sheng Liu, (2010) "Analysis of condition for uniform lighting generated by array of light emitting diodes with large view angle," Optics Express, Vol. 18 (16), pp 17460-76.

[11]. Allen Whang, Yi-Yung Chen, Yuan-Ting Teng, (2009) "Designing Uniform Illumination Systems by surface-tailored Lens and configurations of LED arrays," Journal of Display Technology, Vol. 5 (3), pp 94-103.

[12]. Jin-Jia Chen, Kuang-Lung Huang, Te-Yuan Wang, Yi-Chih Wang, Chuen-Ching Wang, Tsung-Yi Guo, (2010), "LED lighting module design based on a prescribed candle-power distribution for uniform illumination," Proc. of SPIE, Vol. 7849, pp 78490X-1 to 78490X8.

[13]. Ramane D.V., Shaligram A.D., (2011) "Optimization of multielement LED source for uniform illumination of plane surface," Optics Express, Vol. 19, No. S4, A639-A648.

[14]. Huaguo Zhou, Fatih Pirinccioglu, Peter Hsu, (2009) "A new roadway lighting measurement system," Transportation Research Part C, vol.17, 274-284.

[15]. Zeljko Hocenski, Adriana Dizar, Verica Hocenski, (2008), "Illumination Design of a control system for visual inspection of ceramic tiles," IEEE, pp 1093-97.

[16]. Measurement of Light and other Radiant Energy , IES Lighting handbook , 1981: reference volume, section 4.

Authors Biographies

D.V. Ramane born in 1970, is Asst. Prof. in the Department of Electronics, Dr. D.Y. Patil Arts, Commerce and Science College, Pimpri, Pune, India. She received her M. Sc. in 1992 and pursuing her Ph.D. at University of Pune. She has more than 10 publications in the National and International Journals/Conferences. She has authored 11 books on Electronics subjects. Her research interest includes solid state lighting, mathematical modeling and simulation and PC/Micro controller based Instrumentation.

J.A. Bangali born in 1974, is Asst. Prof. in the Department of Electronics, Kaveri College of Science and Commerce, Erandwane, Kothrud, Pune, India. She received her M. Sc. in 1996 and M.Phil. in 2009 from University of Pune. She has around 10 publications in the National and International Journals/Conferences. Her research interest includes smart space automation, lighting research, PC/Micro controller based Instrumentation and sensors.

A. D. Shaligram born in 1960, is professor and Head of the Department of Electronic Science, University of Pune, Pune, India. He received his M. Sc. in 1981 and Ph. D. in 1986 from the same University. He has more than 70 publications in the National and International Journals. His research interest includes fiber optic and optical waveguide sensors, PC/Micro controller based Instrumentation and Biomedical Instrumentation and sensors.