GENERATION OF ELECTRICITY WITH THE USE OF SPEED BREAKERS

Piyush Bhagdikar, Shubham Gupta, Navneet Rana, R. Jegadeeshwaran
School of Mechanical and Building Sciences, VIT University Chennai Campus,
Vandalur - Kelambakkam Road, Chennai 600127, India.

ABSTRACT

In this paper we are trying to utilize one such source. Electricity is generated by replacing the traditional speed breakers with some simple mechanism. As vehicles pass over the speed breakers, they spin the rollers which are connected to a generator which in turn generate electricity. This method is an effective way to produce electricity as the numbers of vehicles on the road are ever increasing. Also the cost of fabrication of the model is low. It can be effectively placed near traffic lights, at the entrance of parking lots and any other place where the traffic density is high. Rollers are fixed on a wooden ramp on which vehicle passes. As vehicle passes over it, it starts moving. A chain drive mechanism is provided which transfer the motion to a DC motor/generator for electricity generation. This method provides an efficient way to generate electricity from the kinetic energy of moving vehicles in roads, highways, parking lots etc.

KEYWORDS: *Non - Conventional energy source, roller mechanism, speed breaker power, chain sprocket, generator.*

I. INTRODUCTION

This paper attempts to show how energy can be tapped and used at a commonly used system, the road speed breakers. The number of vehicles passing over the speed breaker in roads is increasing day by day. A large amount of energy is wasted at the speed breakers through the dissipation of heat and also through friction, every time a vehicle passes over it. There is great possibility of tapping this energy and generating power by making the speed-breaker as a power generation unit. The generated power can be used for the lamps, near the speed breakers.

The present work an attempt has been made to fabricate a ramp, which can utilize the kinetic energy of vehicles in power generation. This type of ramp is best suited for the places where the speed breaker is a necessity. The places like Toll bridges or on vehicle parking stands are best for its utilization. The work also discusses the shortcomings of existing methods and the ways it is countered by this method.

The paper is organized as following. Section II describes the scope of the project. Section III discusses the recent works in the same field. Section IV gives an in-depth explanation of each part and then the assembly as a whole with theoretical analysis using ANSYS. Section V explains the working principle of power generation in this setup. Section VI includes the data collected during the experiment. Section VII describes the conclusion of our approach. Section VIII contains information to improve the method and discusses future work.

II. SCOPE OF THE PAPER

The utilization of energy is an indication of the growth of a nation. For example, the per capita energy consumption in USA is 9000 KWh (Kilo Watt hour) per year, whereas the consumption in India is 1200 KWh (Kilo Watt hour). One might conclude that to be materially rich and prosperous, a human being needs to consume more and more energy. A recent survey on the energy consumption in India had published a pathetic report that 85,000 villages in India do not still have electricity. Supply of

power in most part of the country is poor according to the study by Priyadharshini.M in "*Every Speed Breaker Is Now A Source of Power*" [2]. Hence more research and development and commercialization of technologies are needed in this field. India, unlike the top developed countries has very poor roads. Talking about a particular road itself includes a number of speed breakers. By just placing a unit like the "Power Generation Unit from Speed Breakers", so much of energy can be tapped. This energy can be used for the lights on the either sides of the roads and thus much power that is consumed by these lights can be utilized to send power to these villages.

III. RELATED WORK

Recently several attempts and models have been suggested and tested for harnessing kinetic energy of vehicles via a speed bump. Mechanisms which include springs by A.K. Singh, Deepak S., Madhawendra K. and V. Pandit [1], Rack and Pinion by Aswathaman. V and Priyadharshini.M in "*Every Speed Breaker Is Now A Source of Power*" [2]; by Shakun Srivastava , Ankit Asthana in "*Produce electricity by the use of speed Breakers*"[3] and by Ankit Gupta, Kuldeep Chaudhary & B.N Agrawal in "*An Experimental study of Generation of Electricity using Speed Breaker*"[4] and slider crank by Noor Fatima and Jiyaul Mustafa in *"Production of electricity by the method of road power generation"* [5] have been suggested for producing electricity. Electrodynamics based models by Ankita and Meenu Bala in *"Power generation from speed breaker"* [6] have also been suggested, but are not only expensive to fabricate but involve complicated calculations and can't be used a large scale very easily. Totaram [7] uses a platform plate which is kept inclined on a raised base level to allow vehicles to pass over the raised surface. This system will not work till a vehicle passes on road way.

IV. EXPERIMENTAL MODELING

The proposed model has been modelled using Solidworks software and analysed using ANSYS. The system comprises of a base and two ramps (1and 14 in figure 1), made of plywood to make the model portable. Two pieces of plywood (20 and 21 in figure 2) with dimensions 82x875 mm were cut which support the ramps. Two more side supports of dimensions 446x157 mm were cut which acts as bearing supports (22 in figure 2). Figure 1 shows the complete ramp and base assembly. Three MS shafts (2,3 and 4 in figure 1) 1m in length, 28.5mm OD and 3mm thickness are fitted between the two side supports with the help of six journal bearings. On each shaft one MS Roller (11, 12 and 13 in figure 1) of 78mm OD and 2mm thickness was welded using MS plates of 2mm thickness. On each sides of shaft, 15 cm CI sprockets of 24 teeth. Also two SS bearings were attached 7cm from each end. Fig shows the final assembly of the invention. The three MS rollers are connected to each other via chains inside the ramps. The outer parts of the end rollers have CI sprockets (5, 6, 7, 8 and 9 in figure 1) with 40 teeth. This is turn is connected to a smaller sprocket (15 in figure 2) with 18 teeth. That in turn is connected to the shaft of the generator. The rollers are joined by chains so as to provide a uniform movement in all the rollers. The distances between the rollers were calculated on the basis of standard chains available in the market. The rollers are connected via chains so as to give them uniform rotation at all times. The end roller is connected via a chain to a smaller sprocket which is joined to the shaft of the generator. The system completely eliminates the use of springs which get worn down due to rapid expansion and compression.

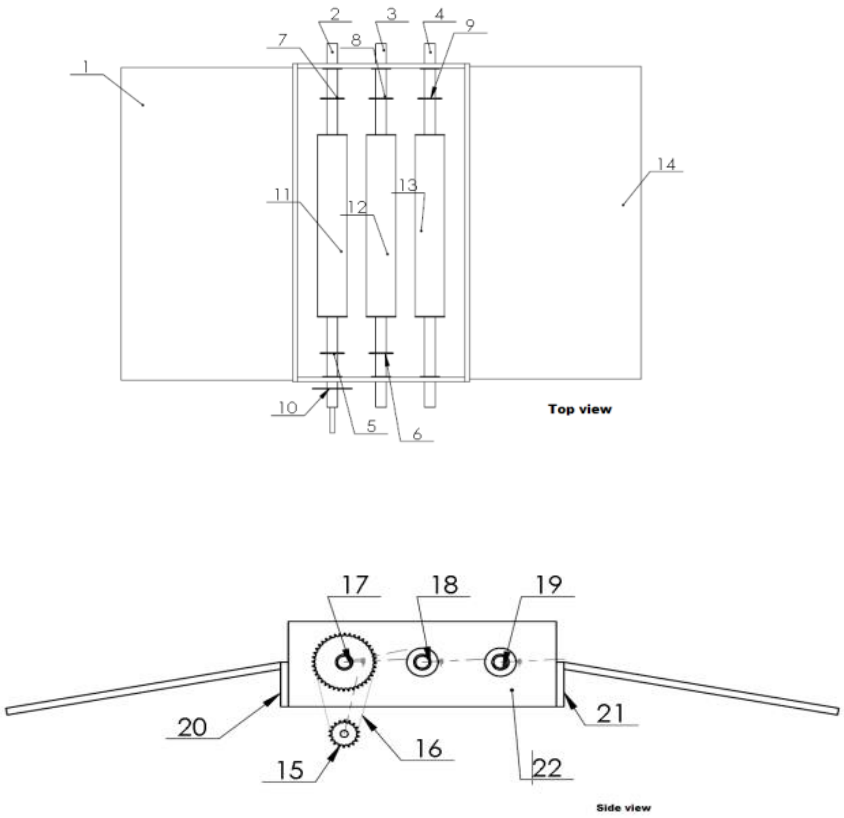

Fig.1 Components of the System (Top & side view)

The simulation conditions when the model was tested in ANSYS Workbench® are depicted in Figure 3. It was assumed that a vehicle of mass 200kgs (with driver) passes over the invention. Since at a time only one of the tire is on the roller thus for a given instant the roller carries a weight of 100kgs. Also some rotation is imparted to it, so to be on safer side it is rotated at 100 rad/s.

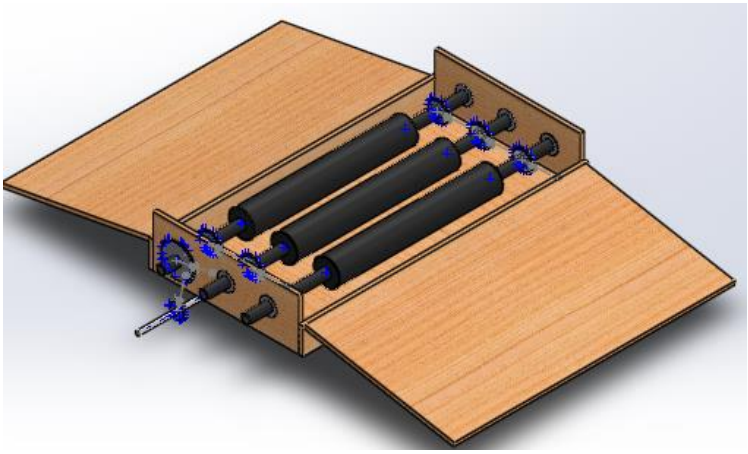

Fig. 2 Model of Final Assembly

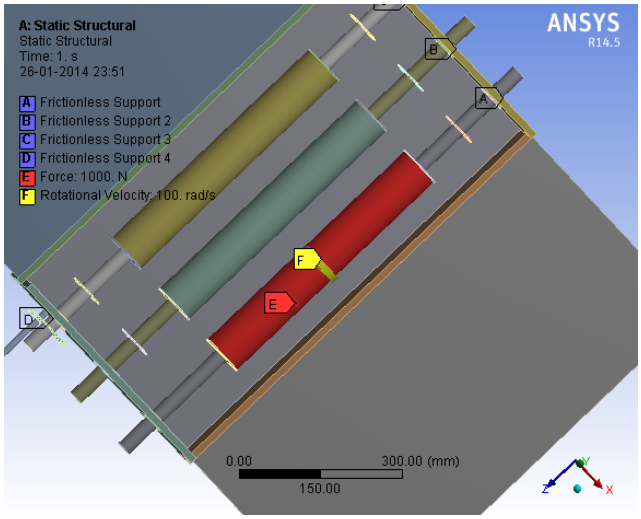

Fig.3 Simulation Conditions

Figure 4 shows the results of the simulation on the invention. The maximum stress on the bearings was 0.62MPa, which is well within the yield point for SS. Figure 5 is the assembled model made after fine tuning of model in ANSYS, according to the dimensions given above. The model was tested using a two wheeler, which was passed over it at different velocities, which gave different power output.

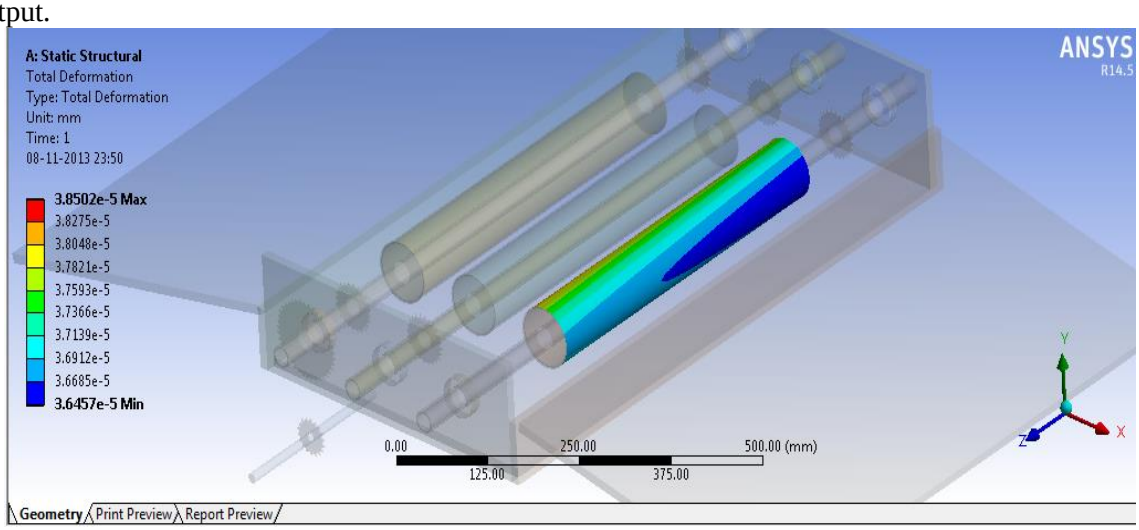

Fig. 4 ANSYS Simulation Results

V. WORKING PRINCIPLE

This project explains the mechanism of electricity generation from speed breakers. The friction force due to vehicle movement acted upon the speed breaker system is transmitted to chain sprocket arrangements. The sprocket arrangement is made of two sprockets. One of the sprocket is larger in dimension than the other sprocket. Both the sprockets are connected with chain which transmits the power from the larger sprocket to the smaller sprocket. As the power is transmitted from the larger sprocket to the smaller sprocket, the speed that is available at the larger sprocket is relatively multiplied at the rotation of the smaller sprocket. The axis of the smaller sprocket is coupled to a gear arrangement. Here we have two gears with different dimensions. The gear wheel with the larger diameter is coupled to the axis of the smaller sprocket. Hence, the speed that has been increased at the smaller sprocket wheel is passed on to this gear wheel of larger diameter. The smaller gear is coupled

to the larger gear. Therefore, as the larger gear rotates it increases the speed of the smaller gear which is following the larger gear and multiplies the speed to more intensity. Though the speed due to the rotary motion achieved at the larger sprocket wheel is less, as the power is transmitted to gears, the final speed achieved is high. This speed is sufficient to rotate the rotor of a generator and is fed into the rotor of a generator. The rotor which rotates within a static magnetic stator cuts the magnetic flux surrounding it, thus producing the electric motive force (emf). This generated emf is then sent to an inverter, where the generated emf is regulated. This regulated emf is now sent to the storage battery where it is stored during the day time and can be used in night time for providing power to street lights.

VI. RESULT AND DISCUSSION

For testing the above setup, a two-wheeler was run over the model at different speeds to get the reading of current and voltage generated under different conditions. Table 1 shows the results of the experiments conducted on the prototype invention. It is observed that on moving a small vehicle over the roller, the speed varies from 10-15 km/hour, the voltage produced is in the range of 3-4 volts.

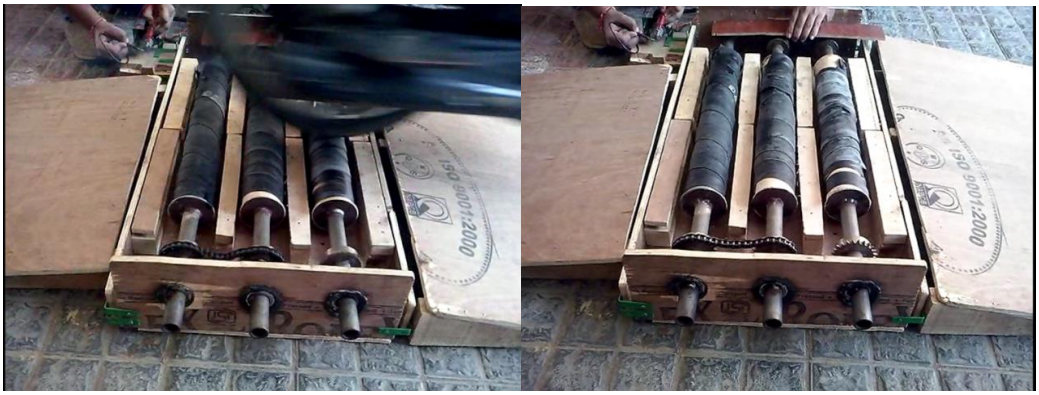

Fig. 5 Testing of the Fabricated Model

Voltage (Volts)	Current (mA)
3	18
3.2	24
2.5	20

Table 1 Experimental Results for 1 tyre

For a single run of a 2 wheeler, 0.06W/tire of power is produced. The Indian Roads Congress' latest Data [9] considers a vehicular flow of 3150 pcu/h (passengers carrying unit per hour) for peak hours (8 hour windows), 1500 pcu/h for off peak and 400pcu/h for nights as a standard, resulting in a total flow of 40400 pcu/day. The above data implies that large amounts of energy can be harnessed for 4/6/8 wheelers on highways employing similar setups.

VII. CONCLUSION

For a vehicular flow of 40400 per day, which includes 2/3/4/6/8 wheelers, the energy produced will be much more significant compared to the experimental results obtained, thus making it a good energy producing setup as energy of vehicles on impact with the speed breakers is anyway lost. This is lost to heat and sound. This energy can be tapped, stored and used as back up or for small applications. Improvements have to be made in the setup to increase the efficiency which is discussed in following section. In this study a new technique has been proposed to gate electricity from speed breakers. This technique will help to conserve our natural resources.

VIII. FUTURE SCOPE

- In the current model, the rollers are covered with plain rubber to increase the friction between the rollers. It can be replaced with another material with a coarse texture to provide better grip between the tires and the rollers.
- The chain drive can be replaced with a V-belt drive. This would reduce the shocks and vibration caused when under heavy load. Also Belt drives do not require lubrication which would decrease maintenance costs.
- The bearings can be replaced with more durable plumber bearings reducing the chance of failure.
- The material of the rollers can be made lighter so as to increase the efficiency. The mild steel used in this model can be replaced by aluminium alloy 6063 or 6061.

ACKNOWLEDGEMENT

We are very thankful to all the faculty members for guiding and motivating us to work on this project. Their support and guidance while doing the project was invaluable. We would like to thank our Dean and Program Manager, for giving us support and allowing us to work in labs. We are also thankful to VIT University for giving us adequate resources to work on the project. Finally, we thank our friends and parents who helped us whenever we faced difficulties.

REFERENCES

[1].Alok Kumar Singh, Deepak Singh, Madhawendra Kumar, Vijay Pandit, Generation of Electricity through Speed Breaker Mechanism; *International Journal of Innovations in Engineering and Technology (IJIET, 2(2),* 2013, 20-24.

[2].Aswathaman. V, Priyadharshini.M, Every Speed Breaker Is Now A Source of Power; *International Conference on Biology, Environment and Chemistry (IPCBEE),* 1, 2011, 234 - 236.

[3].Shakun Srivastava , Ankit Asthana, Produce electricity by the use of speed Breakers; *Journal of Engineering Research and Studies , 2(1),* 2011, 163 – 165.

[4].Ankit Gupta, Kuldeep Chaudhary & B.N Agrawal, An Experimental study of Generation of Electricity using Speed Breaker, *International Journal of Mechanical Engineering (IJME), 1(1),* 2012, 35-40

[5].Noor Fatima ,Jiyaul Mustafa, Production of electricity by the method of road power generation, *International Journal of Advances in Electrical and Electronics Engineering, 1(1),* 9-14.

[6].Ankita, Meenu Bala, Power generation from speed breaker, *International Journal Of Advance Research In Science And Engineering (IJARSE),* 2 (2), 2013.

[7].Totaram Ingle Devanand, System of Genreating Electricity; Patent publication No. WO 2013011519 A1, 2013.

[8].Aniket Mishra, Pratik Kale, Atul Kamble, Electricity Generation from Speed Breakers, The International Journal Of Engineering And Science (IJES), 2(11), 2013, 25 – 27.

[9].IRC86,Geometric Design Standards for Urban Roads in Plains, *Indian Roads Congress,1991.*

AUTHOR PROFILE

Piyush S Bhagdikar is pursuing his under graduate degree in mechanical engineering at VIT University Chennai Campus. He has published one research paper in a national journal. Recently he has filed one Indian patent.

Shubham Gupta is pursuing his under graduate degree in mechanical engineering at VIT University Chennai Campus. Recently he has filed one Indian patent.

Navneet S Rana is a third year mechanical student and studying in VIT University Chennai Campus. He has also filed one Indian patent.

R. Jegadeeshwaran is working as an Assistant Professor in the School of Mechanical and Building Sciences, in VIT University Chennai Campus. He has the vast experience in teaching and is guiding many undergraduate research students.