EMBEDDED BASED WIRELESS ICU MONITORING SYSTEM

Priya. M, Mathubala. R. S, Anitha .M, Vanitha .M
Vivekanandha Institute of Engineering and Technology, Tamil Nadu, India

ABSTRACT
Present industry is increasingly shifting towards automation. In order to aid the tedious work and to serve the mankind, today there is a general tendency to develop an intelligent operation. The proposed system "Embedded Based Wireless ICU Monitoring System" is designed and developed to accomplish the various tasks in an adverse environment of an industry. The intelligent machine is loaded with several units such as pressure sensor, temperature sensor, ECG monitoring, LCD, microcontroller, and alarm which synchronously work with the help of a start-of-the-art PIC microcontroller. The sensors pickups the corresponding bio-potentials and delivers to microcontroller. The microcontroller will display those values by LCD. And moreover, those values will be continuously monitored in the computer in doctor room. If, any abnormal condition occurs then it will be indicated in doctors PC by alarm and it enables the doctor to get know about the condition of the patient. This makes the doctor to go to the patient immediately and serve them with intensive care. Thus, this project is an owe to the technical advancement. This prototype system can be applied effectively and efficiently in an expanded dimension to fit for the requirement of industrial, research and commercial applications.

KEYWORDS: *Automated ICU, Embedded monitoring, Intelligent ICU, Wireless ICU*

I. INTRODUCTION

In modern ICU (Intensive Care Unit), many operations on patients are hampered by the attached monitoring and treatment equipments, which obstructs nursing staff and hinders the patients from moving freely. Fortunately, wireless transfusion controlling and monitoring network not only aids physicians and nurses in providing convenient treatments and comforts to the patient but also regulates the model of therapy based on the physiologic parameters. The paper presents a wireless monitoring system via Zigbee, including sensor and radio frequency miniature modules, wireless BSNs, wireless transfusion devices, base stations, and centre server. An experiment that the patients were monitored (including ECG-II, pulse wave, SpO_2 and respiration) and transfused continuously in 24 hours, demonstrates that the system is characterized as wireless, miniature, highly reliable, anti-jamming, low power consuming and intelligent. The advantages of the approaches utilized in our work - Zigbee wireless communication technology - break the traditional monitoring and transfusion pattern in ICU thus the quality and efficiency of medical treatment are improved. The main objective of the project is to monitor the ICU patient parameter continuously through PC [1],[2],[4]. In this modern world, the diseases are increasing day by day, on other side the technology also has improved for better treatments. For the goodness of patient in the hospital, the parameters of them are monitored very carefully. Bio-medical technology extends and improves life.

In this paper, the ICU monitoring system is a PC-based design, which has advanced functions such as network transmission, data storage for better operating performance and system augmentation. The wireless transmission supports the data in transmitting from ICU to PC. The PC helps the doctor to view the details of patient whenever he needed. Thus, this system renders better service for treating the patients with more care.

II. PROBLEM DEFINITION

In advanced versions of the ICU, the central station is provided with data recording tape recorders and the data's can be analyzed with computers. Each data from the bedside monitors are fed to an electronic threshold comparator which determines the level of signal is too low or high. And the alarm gets operated. But, this system has a built-in time delay. The time delay will not trigger the alarm as soon as the abnormal data is received. Only in case of receiving the data for a long period, the alarm gets operated. Apart from, current medical monitoring devices just record the data and do not transmit in real time. Thus immediate action cannot be taken, if any abnormality is found. Transformation of information from person to person takes more amount of time. Careless of human resources may occur.

III. MODULE DESCRIPTION

The paper consist of three modules (i.e.) transmitter section, receiver section and PC section. The transmitter section consist of ECG unit, temperature unit, heart beat unit, pressure unit, power supply and Zigbee unit which enables the signal to transmit. The receiver section consists of Zigbee receiver which receives the signal and it will transmit to the PC

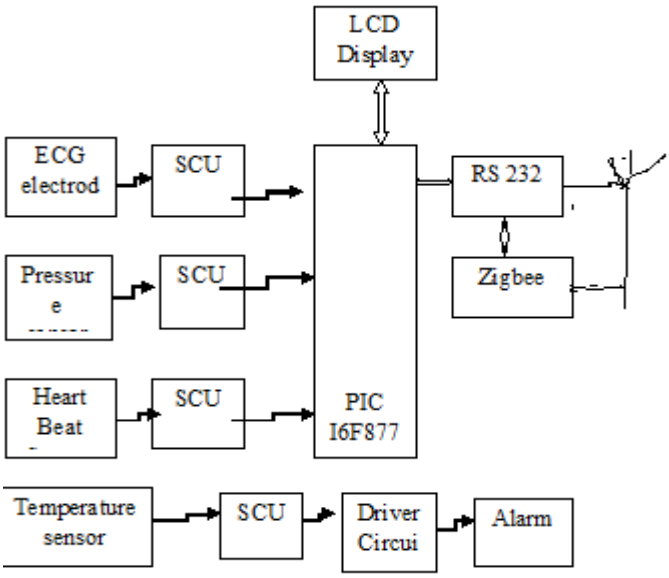

Fig. 1.Block diagram of transmitter section

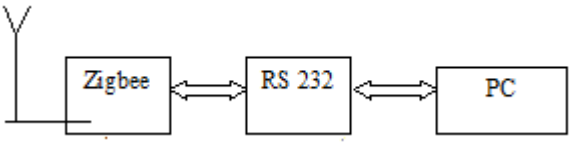

Fig. 2. Block diagram of receiver section

IV. CIRCUIT DESCRIPTION

4.1. Electrocardiogram

In this circuit there are three electrodes are used to measure the ECG waves in which two electrodes are fixed with left and right hand another one electrode is fixed in the right leg which acts as reference ground electrode. Electrode1 and Electrode2 are pick up the ECG waves from the both hands. [1]Then the ECG waves are given to instrumentation amplifier section. The instrumentation amplifier is constructed by the TL072 operational amplifier. The TL072 are high speed J-FET input dual

operational amplifier incorporating well matched, high voltage J-FET and bipolar transistors in a monolithic integrated circuit. The devices feature high slew rates, low input bias, offset current and low offset voltage temperature coefficient. The instrumentation amplifier amplifies the differential signal from the both electrodes. This amplified ECG waves contains the line frequency, high frequency and low frequency noise signals. So the ECG wave is fed to filter section [5].

The filter section consists of high pass filter and low pass filter which is used to remove the high and low frequency noise signal. After the filtration the ECG wave is given to pulse width modulation unit. In this section the ECG wave converts to pulse format in order to perform the isolation. The isolation is constructing by the opto coupler. The isolation is necessary to isolate the human body and monitoring the equipment. Then the ECG pulse format wave is given to PWM demodulation unit in which the pulse format is reconstruct to original wave. Finally noise free ECG wave is given to amplifier. Then the amplified signal is given to the monitored device.

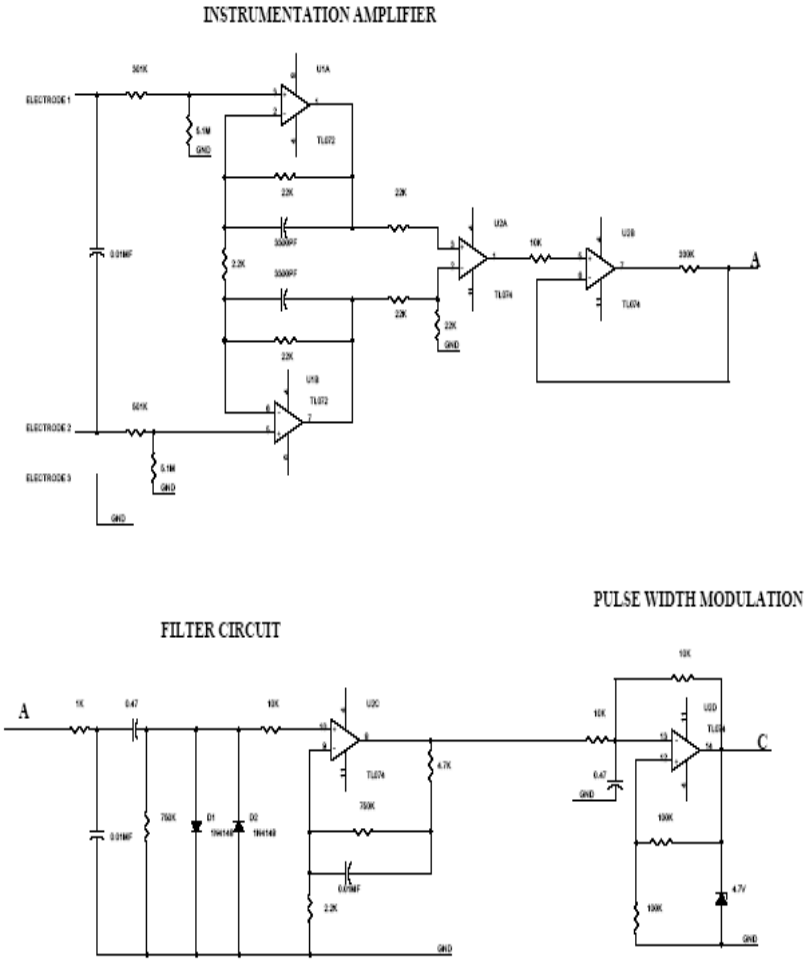

Fig. 3. Amplifier and filter section

4.2. Temperature

The thermistor provides the output voltage which is proportional to measuring temperature. Then output voltage is given to inverting input terminal of the comparator. The comparator is constructed by the TL071 operational amplifier. The reference voltage is obtained from the resistor network which is given to non-inverting input terminal of the comparator. Now the comparator is compared with reference voltage level and delivered the error voltage in the output which is given to next stage of gain amplifier. In gain amplifier the variable resistor is connected in the feedback path. By adjusting the resistor we can set the desired gain level. Then the gain voltage is regulated to 5v level with the help of 5.1v Zener diode. Then the final voltage is given to ADC or other circuit in order to calibrate the temperature.

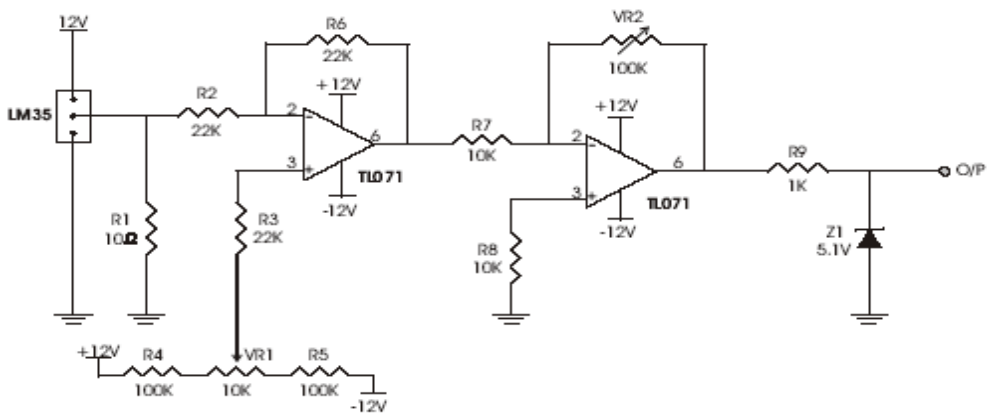

Fig.4. Circuit Diagram of Temperature Board

4.3. Heart Beat

This circuit is designed to measure the heart rate. The heart rate is measured by IR transmitter and receiver. Infrared transmitter is one type of LED which emits infrared rays generally called as IR Transmitter. Similarly IR Receiver is used to receive the IR rays transmitted by the IR transmitter. One important point is both IR transmitter and receiver should be placed straight line to each other. The IR transmitter and receiver are placed in the pulse rate sensor. When you want measure the pulse rate, the pulse rate sensor has to be clipped in the finger [12], [13]. The IR receiver is connected to the Vcc through the resistor which acts as potential divider. The potential divider output is connected to amplifier section. When supply is ON the IR transmitter passes the rays to the receiver. Depending on the blood flow, the IR rays are interrupted. Due to that IR receiver conduction is interrupted so variable pulse signals are generated in the potential divider point which is given to A1 amplifier through the capacitor C1. The coupling capacitor C1 is used to block the DC component because the capacitor reactance is depends on the frequency. For DC component the frequency is zero so the reactance is infinity now capacitor acts as open circuit for DC component.

The amplifier section is constructed by the LM 324 quad operational amplifier. It consists of four independent, high gains and internally frequency compensated operational amplifiers named as A1, A2, A3 and A4 amplifiers. The varying pulse from the potential divider is amplified by the A1 amplifier. In this amplifier the capacitor C2 is connected in parallel with feedback resistor to filter the any DC component in the amplified signal. If any spikes in the amplified signals, they are further filtered by the C3 and C4 capacitors. After filtration the signal is again amplified by the A2 amplifier. Then amplified signal is given to inverting input terminal of comparator. The comparator is constructed by the A4 amplifier in which the reference voltage is given to non-inverting input terminal. The reference voltage is generated by the A3 amplifier. Then the comparator compares the two signal and delivered the +12v to -12v square wave pulse at its output. Then the square wave signal is given to base of the BC 557 and BC547 switching transistors in order to convert the TTL voltage 0 to 5v level. Finally the TTL output is given to MM 74C04 inverter to invert the square pulse. Then the final square wave signal is given to microcontroller or other interfacing circuit in order to monitor the heart rate.

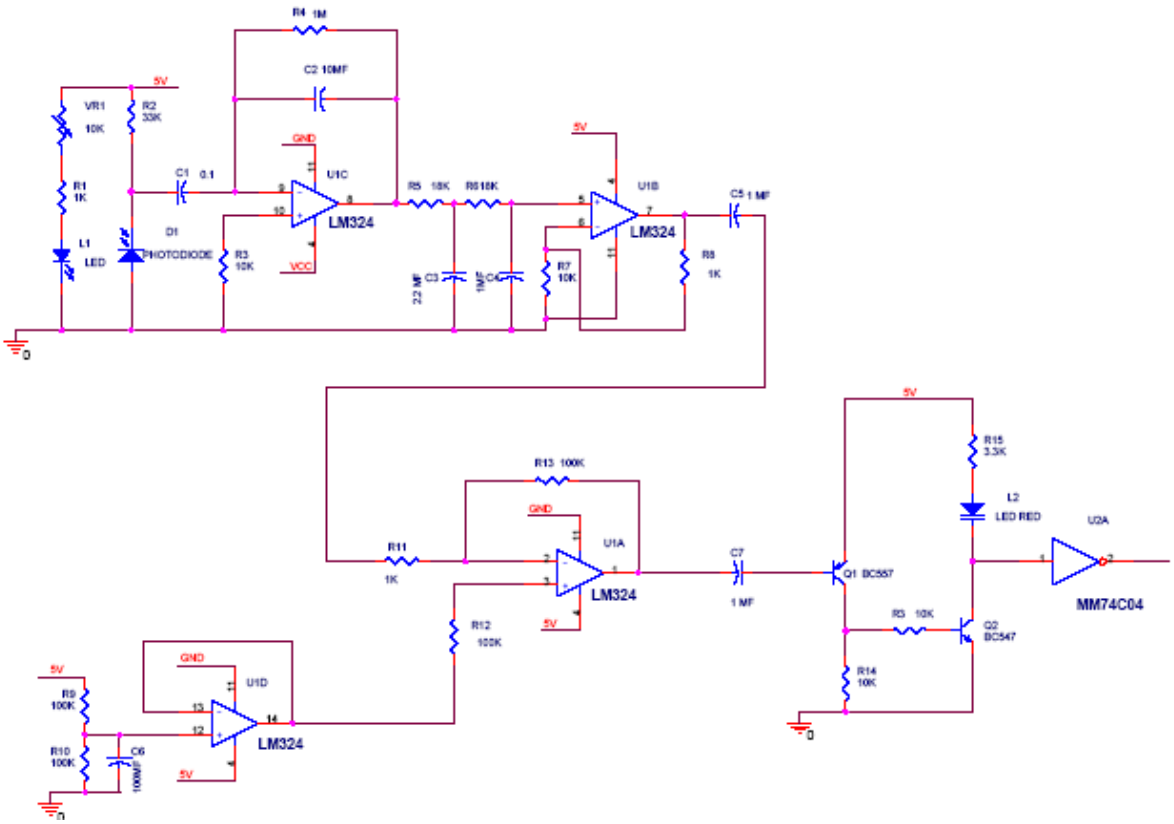

Fig.5.Circuit diagram of Heart Beat Board

4.4. Pressure

This circuit is designed to measure the varying pressure. The pressure is measured by diaphragm which is one type of transducer. When pressure is applied, the diaphragm is moving in the forward side. The diaphragm moving is depends on the pressure. So it generates the voltage pulse depends on the movement of diaphragm. The voltage pulses are in the range of milli voltage. Hence the voltage pulse is given to Instrumentation amplifier section in order to amplify the signals. The important features of instrumentation amplifier are high gain accuracy, high CMRR, low output impedance. Here the instrumentation amplifier is constructed by TL082 operational amplifier. The TL082 is the dual operational amplifier that is two operational amplifiers is fabricated in single chip. Here the instrumentation amplifier acts as differential instrumentation amplifier. The diaphragm transducer terminals are connected to A1 and A2 amplifier of the differential instrumentation amplifier.

The difference of the varying voltage signals from the transducer is amplified by the instrumentation amplifier. The A4 amplifier is used for zero adjustment. When there is no pressure the diaphragm may be sliding in the forward or reverse side. Due to that instrumentation amplifier delivered some voltage at the output. To avoid this problem A4 amplifier is used for zero adjustment. Hence when there is no pressure the output is zero. The A5 amplifier acts as gain amplifier in which variable resistors is connected as feedback resistor. By adjusting the feedback resistor we can vary the gain of the output signal. Then the final gain adjusted signal is amplified by the A6 amplifier.

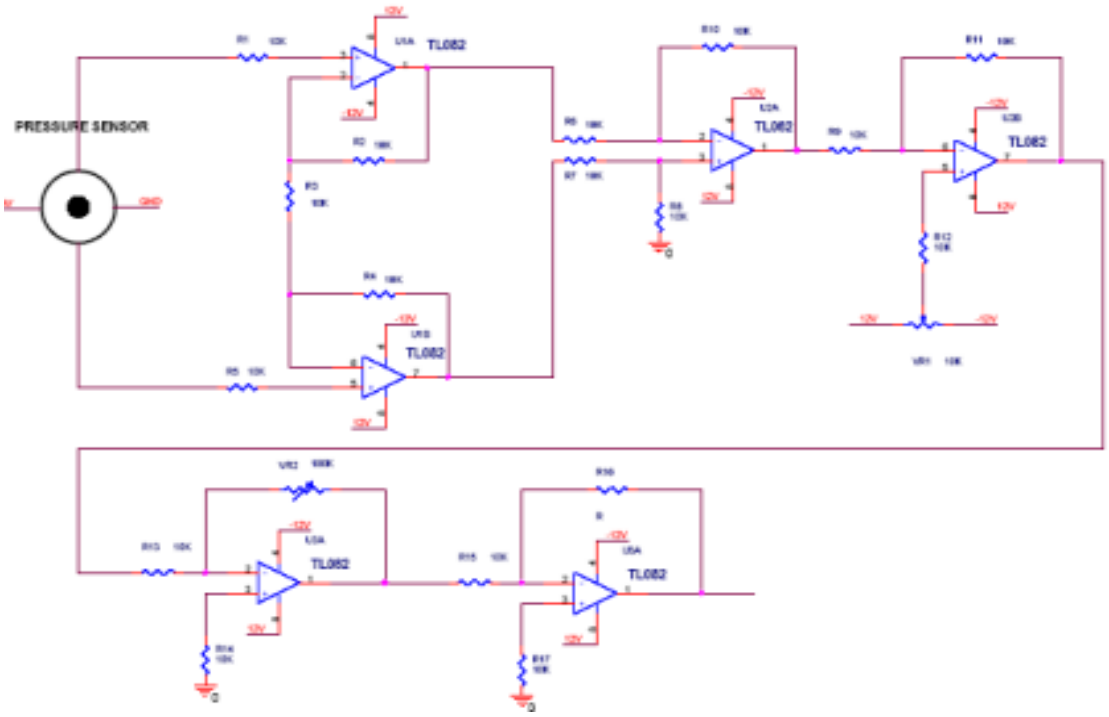

Fig.6. Circuit diagram of Pressure Board

4.5. PIC Pin Diagram

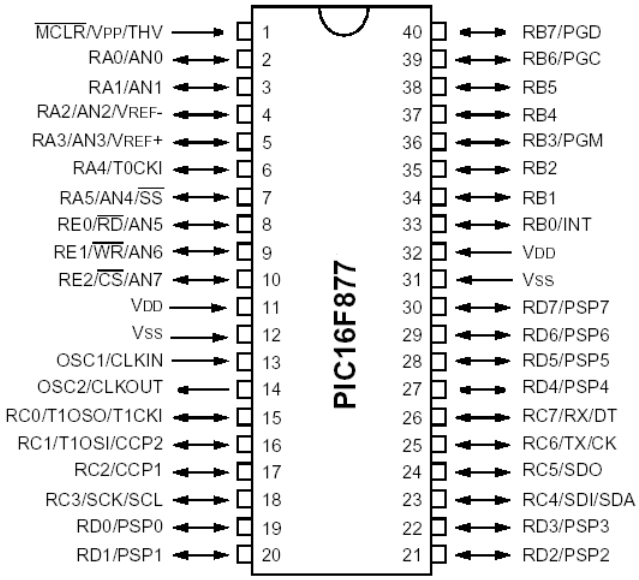

Fig.7. Pin Diagram of PIC 16F877

4.6. Zigbee Unit

The mission of the Zigbee Working Group is to bring about the existence of a broad range of interoperable consumer devices by establishing open industry specifications for unlicensed, undeterred peripheral, control and entertainment devices requiring the lowest cost and lowest power consumption communications between compliant devices anywhere in and around the home[9],[11].
There are three different Zigbee device types that operate on these layers in any self-organizing application network. These devices have 64-bit IEEE addresses, with option to enable shorter addresses to reduce packet size, and work in either of two addressing modes – star and peer-to-peer.

1. **The Zigbee coordinator node**: There is one, and only one, Zigbee coordinator in each network to act as the router to other networks, and can be likened to the root of a (network) tree. It is designed to store information about the network.
2. **The full function device FFD**: The FFD is an intermediary router transmitting data from other devices. It needs lesser memory than the Zigbee coordinator node, and entails lesser manufacturing costs. It can operate in all topologies and can act as a coordinator.
3. **The reduced function device RFD**: This device is just capable of talking in the network; it cannot relay data from other devices. Requiring even less memory, (no flash, very little ROM and RAM), an RFD will thus be cheaper than an FFD. This device talks only to a network coordinator and can be implemented very simply in star topology.

Zigbee technology is designed to best suit these applications, for the reason that it enables reduced costs of development, very fast market adoption, and rapid ROI. With Zigbee designed to enable two-way communications, not only will the consumer be able to monitor and keep track of domestic utilities usage, but also feed it to a computer system for data analysis.

4.7. Alarm

The circuit is designed to control the buzzer. The buzzer ON and OFF is controlled by the pair of switching transistors (BC 547). The buzzer is connected in the Q2 transistor collector terminal. When high pulse signal is given to base of the Q1 transistors, the transistor is conducting and close the collector and emitter terminal so zero signals is given to base of the Q2 transistor. Hence Q2 transistor and buzzer is turned OFF state. When low pulse is given to base of transistor Q1 transistor, the transistor is turned OFF. Now 12v is given to base of Q2 transistor so the transistor is conducting and buzzer is energized and produces the sound signal.

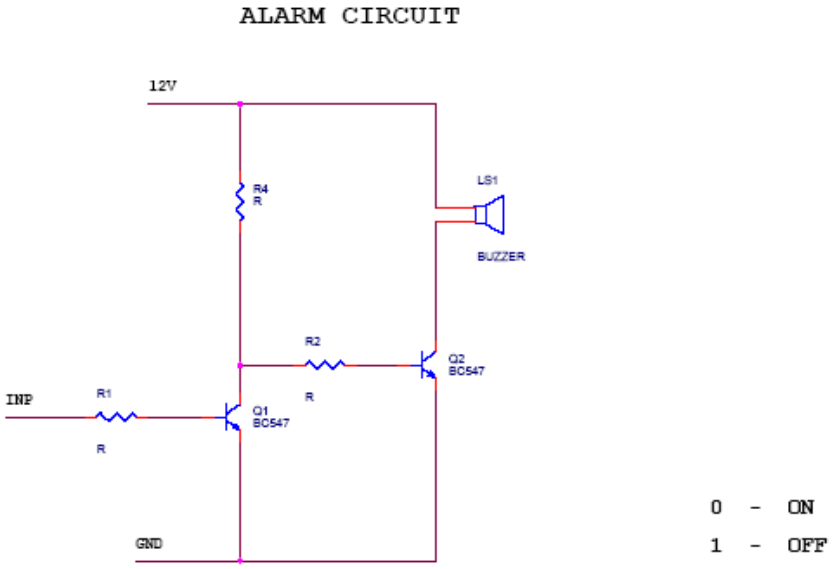

Fig.8. Circuit diagram of alarm

4.8. Pc Section

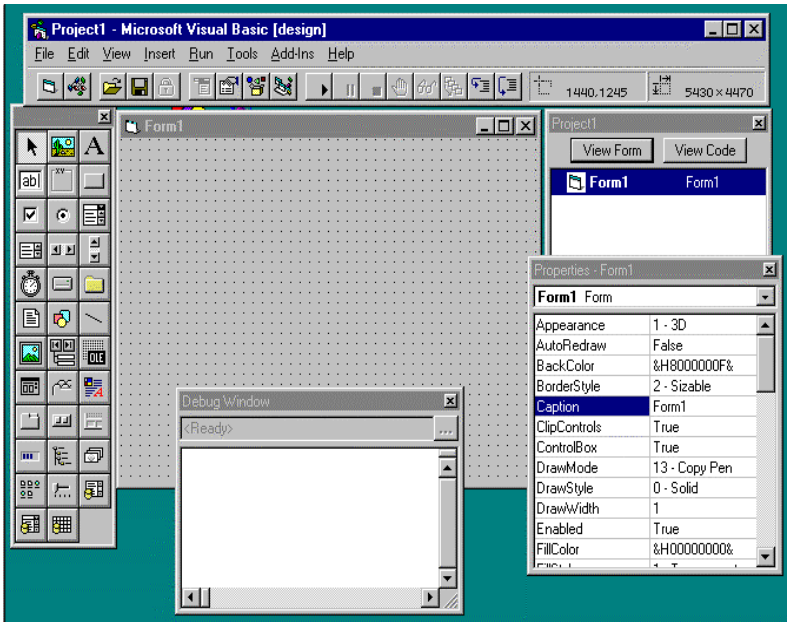

Fig.9. Display of general form

The window on the right is the properties window. The window on the left is the toolbox (See below). The large gray area in the middle is a form. In this form program interface can be laid out. The interface that user sees is referred to as a Graphical User Interface (GUI).Visual Basic is a RAD or Rapid Application Development tool. This means that can develop professional applications much faster than some other languages (C/C++, Pascal and COBOL). The way Visual Basic accomplishes this task is by giving templates for most common items a program might need. Then merely change certain facets of the template to make it. These templates are called controls and can be found in toolbox.

The facets of a control that can change are called properties and are found in the properties box. The properties box can be accessed by clicking on "View" on the drop down menu at the top of the screen and then clicking on properties, or just by pressing the F4 key. It is important to realize that the properties window will display properties for whatever control currently has focus. Focus by clicking once on the control, to have the focus. The properties are all listed in alphabetical order with the exception of the name property that is listed first. It is vital that can realize that the name property is what the computer will call the control, not what the user will see. The user will see the caption property (for those controls that have one.).

Simply drag a control from the toolbox and then place it on the form. Then drag it to any spot on the form as our wish. Simply double click on a control in the tool box and it will appear in the center of the form. All controls can also be stretched to alter their size.

V. CONCLUSION

Patient monitoring systems are emerging in response to increased healthcare needs of an aging population, new wireless technologies, better video and monitoring technologies, decreasing healthcare resources, an emphasis on reducing hospital days, and proven cost-effectiveness.

Of these new high-tech patient monitoring systems, nearly all focus on some form of wireless or remote patient monitoring. Advances in remote patient monitoring include new peripherals, real-time audio and video for "face-to-face" interaction between clinicians and patients, wireless communication, systems that "sort" the vast amount of data collected in order to put it into the context of a patient's condition, portable and ambulatory monitors, web-based access to the patient record, systems that transfer data to an electronic medical record (EMR), and full-service outsourcing that includes a clinician to evaluate data and send a report to the attending physician.

ACKNOWLEDGEMENTS

Behind every achievement lies an unfathomable sea of gratitude to those who actuated it, without them it would never have been into existence. To them we lay the word of gratitude imprinted with in us. We sincerely acknowledge to all the staff members and classmates who directly or indirectly helped us to finish the paper successfully. We would like to take this opportunity to express our gratitude and to extend our best wishes to who guided, inspired, motivated to do this paper.

REFERENCES

[1]. John G. Webster, Medical Instrumentation Application and Design
[2]. D. Bottazzi, A. C. and Montanari, R.Context-aware middleware solutions for anytime and anywhere emergency assistance to elderly people. IEEE Communication Magazine, 2006.
[3]. Y. B. Choi, H. S. K. E. C., J. S. Krause and Chung, K. Telemedicine in the USA: standardization through information management and technical applications. IEEE Communications Magazine, 2006.
[4]. Elizabeth Krupinski, R. P. D. E. R. S., Michelle Nypaver and Sapci, H. Clinical Applications in Telemedicine/Telehealth. IEEE Communications Magazine,2002.
[5]. P. Standing, A. C., M. Dent and Glenville, B. Changes in referral patterns to cardiac out-patient clinics with ambulatory ECG monitoring in general practice. The British Journal of Cardiology, 2001.
[6]. Sanjay Sood, S. J. R. D. C. R. D. N. P. R. C. M., Victor Mbarika. What is Telemedicine? A Collection of 104 Peer-Reviewed Perspectives and Theoretical Underpinnings. Telemedicine and e-Health, 2007.
[7] Meystre, S. The Current State of Telemonitoring: A Comment on the Literature. Telemedicine and e-Health, 2005.
[8]. Consultation, W. G. Health Telematics Policy in support of the renewed Health-for All Strategy in the 21st century. Genevsa. 1997.
[9]. Shimuzu, K. Telemedicine by Mobile Communication. IEEE Engineering in Medicine and Biology, 1999.
[10]. Tanriverdi, H. and Iacono, C. S. Diffusion of Telemedicine: A Knowledge Barrier Perspective. Telemedicine Journal, 1999.
[11].Jasemian, . N. L., Y. Design and Implementation of a Telemedicine System Using Bluetooth Protocol and GSM/GPRS Network, for Real-Time RemotePatient Monitoring. Technology and HealthCare 13, 2005.
[12].R. S. Khandpur - Hand book of Biomedical Instrumentation
[13]. R. Lakshmi Rekhaand C. Ravikumar , Bio medical instrumentation/Medical electronics (Jan 2008)

AUTHOR'S BIOGRAPHY

Priya.M Master of Engineering in Embedded Systems Vivekanandha Institute of Engineering and Technology, TamilNadu, India

Mathubala. R. S Master of Engineering in Embedded Systems Vivekanandha Institute of Engineering and Technology, TamilNadu, India

Anitha.M Master of Engineering in Embedded Systems Vivekanandha Institute of Engineering and Technology, TamilNadu, India

Vanitha.M Master of Engineering in Embedded Systems Vivekanandha Institute of Engineering and Technology, TamilNadu, India